www.reelschematic.com

Daiwa
COMMITTED TO TOTAL QUALITY

SPINNING REEL RS2650/4050

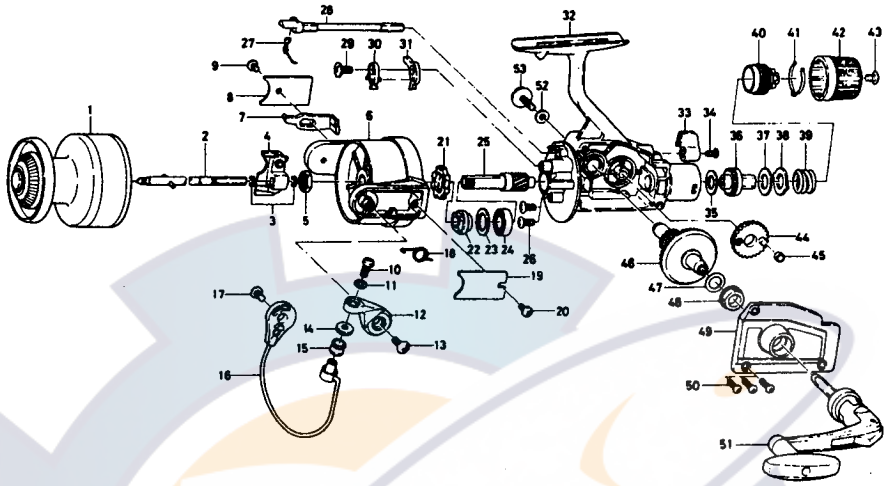

Key No.	Parts No.	Parts Name
1	B80-6603	Spool
2	B78-2702	Main shaft
3	B78-3101	Oscillating slider retainer
4	B78-3002	Oscillating slider
5	B10-5701	Rotor nut
6	B80-5901	Rotor
7	B78-2401	Bail trip lever
8	B63-0903	Bail trip cover
9	351-6102	Bail trip cover screw
10	B11-2801	Line roller screw
11	B11-2701	Lock washer
12	B86-4601	Bail arm
13	352-1103	Bail arm screw
14	501-2001	Line roller washer
15	250-4502	Line roller
16	B78-5901	Bail
17	352-1103	Bail trip cam screw
18	B19-7201	Bail spring
19	634-6803	Bail spring cover
20	351-6102	Bail spring cover screw
21	B34-2202	Anti-reverse ratchet
22	B78-6701	Pinion spacer
23	B47-9201	Ball bearing washer
24	B54-6001	Ball bearing
25	B93-4701	Pinion gear
26	353-8202	Ball bearing screw
27	144-0321	Anti-reverse cam spring
28	B80-5701	Anti-reverse cam
29	B99-8401	Anti-reverse pawl screw
30	B80-5601	Anti-reverse pawl plate
31	B80-5501	Anti-reverse pawl
32	K00-8801	Body
33	B80-4501	Anti-reverse lever
34	352-2502	Anti-reverse lever screw
35	B46-9504	Drag washer A
36	B80-6002	Click gear
37	B78-6601	Drag washer B
38	373-3601	Eared washer
39	B91-3801	Drag coil spring
40	B77-0002	Drag screw
41	B77-0301	Drag washer spring
42	B80-6101	Drag knob
43	352-1103	Drag knob spring screw
44	B79-0501	Oscillating gear
45	B78-9801	Oscillating collar
46	B78-9501	Drive gear
47	371-2800	Drive gear washer
48	B07-3303	Bushing
49	K01-2001	Side cover
50	351-5904	Side cover screw
51	B93-4801	Handle
52	371-9522	Handle lock washer
53	B50-5601	Handle lock screw

RS4050 special parts

1	K00-8401	Spool
6	B80-7501	Rotor
7	B78-4002	Bail trip lever
16	B78-9101	Bail
32	K00-8802	Body
49	K01-2002	Side cover
51	B93-5101	Handle